Force Control Industries, Inc.
3660 Dixie Highway Fairfield, Ohio 45014 USA
Phone: 513-868-0900 Fax: 513-868-2105

# Posidyne Specifications (Model 02—11)

| Size | Logic | Max Clutch Torque (Lb. In.) | | | Max. Brake Torque (Lb. In.) Springs Only | | Max. Brake Torque (Lb. In.) With Max. Air Assist | | | Max. RPM | | Max. KE per Engmt. (Ft. Lbs.) | Average Thermal HP | | | Air Vol. per Engmt. (in3) | Oil Cap (Qts) | Inertia of Cyclic Parts (Lb.Ft.2) |
|---|---|---|---|---|---|---|---|---|---|---|---|---|---|---|---|---|---|---|
| | | Static | Dyn. | Max. Air Press (psi) | Static | Dyn. | Static | Dyn. | Max. Air Press (psi) | Basic & Fan Cooled | Water Cooled | | Basic | Fan | Water | | | |
| 02 | S | 518 | 439 | 60 psi | 48 | 41 | 553 | 468 | 60 psi | 1800 | 3600 | 11,230 | Horizontal 0.8 | 2 | 4 | 1 | Horiz 2 | 0.04 |
| | SA | 542 | 458 | 80 psi | 164 | 139 | 501 | 424 | 40 psi | | | | | | | | | |
| | A | 503 | 426 | 80 psi | 126 | 107 | ---- | ---- | ---- | | | | | | | | ----- | |
| | B | 336 | 284 | 80 psi | 252 | 214 | ---- | ---- | ---- | | | | Vertical 0.40 | 1.50 | 6 | | Vert 3 | |
| | C | 335 | 284 | 60 psi | ---- | ---- | ---- | ---- | ---- | | | | | | | | | |
| | P | 590 | 499 | 60 psi | ---- | ---- | 505 | 428 | 60 psi | | | | | | | | | |
| 2.5 | S | 1,331 | 1,126 | 60 psi | 113 | 96 | 1,396 | 1,181 | 60 psi | 1800 | 3600 | 15,865 | Horizontal 0.70 | 2.00 | 4.00 | 5 | Horiz 2.5 | 0.20 |
| | SA | 1,482 | 1,227 | 80 psi | 512 | 433 | 1,663 | 1,399 | 40 psi | | | | | | | | | |
| | A | 1,451 | 1,254 | 80 psi | 476 | 403 | ---- | ---- | ---- | | | | | | | | | |
| | B | 968 | 819 | 80 psi | 952 | 806 | ---- | ---- | ---- | | | | | | | | | |
| | C | 1,270 | 1,074 | 60 psi | ---- | ---- | ---- | ---- | ---- | | | | Vertical 0.35 | 1.00 | 2.00 | | Vert 4 | |
| | SCP | 1,234 | 1,061 | 60 psi | ---- | ---- | 1,051 | 904 | 60 psi | | | | | | | | | |
| | P | 1,497 | 1,267 | 60 psi | ---- | ---- | 1,283 | 1,086 | 60 psi | | | | | | | | | |
| 03 | S | 2,574 | 2,178 | 60 psi | 144 | 122 | 2,049 | 1,734 | 60 psi | 1800 | 3600 | 21,494 | Horizontal 0.75 | 2.80 | 8.00 | 8 | Horiz 3.5 | 0.20 |
| | SA | 2,790 | 2,361 | 80 psi | 651 | 551 | 2,238 | 1,894 | 40 psi | | | | | | | | | |
| | A | 2,852 | 2,413 | 80 psi | 602 | 509 | ---- | ---- | ---- | | | | | | | | | |
| | B | 1,895 | 1,603 | 80 psi | 1,203 | 1,018 | ---- | ---- | ---- | | | | | | | | | |
| | C | 2,474 | 2,093 | 60 psi | ---- | ---- | ---- | ---- | ---- | | | | Vertical 0.38 | 1.40 | 4.00 | | Vert 4.5 | |
| | SCP | 2,668 | 2,258 | 60 psi | ---- | ---- | 1,833 | 1,551 | 60 psi | | | | | | | | | |
| | P | 2,857 | 2,417 | 60 psi | ---- | ---- | 1,905 | 1,612 | 60 psi | | | | | | | | | |
| 05 | S | 4,325 | 3,659 | 60 psi | 212 | 179 | 4,021 | 3,402 | 60 psi | 1800 | 3600 | 42,988 | Horizontal 1.00 | 4.50 | 12.00 | 8 | Horiz 8 | 0.30 |
| | SA | 4,889 | 4,137 | 80 psi | 789 | 668 | 3,645 | 3,085 | 40 psi | | | | | | | | | |
| | A | 4,487 | 3,797 | 80 psi | 1,136 | 962 | ---- | ---- | ---- | | | | | | | | | |
| | B | 2,626 | 2,222 | 80 psi | 2,273 | 1,923 | ---- | ---- | ---- | | | | | | | | | |
| | C | 4,017 | 3,399 | 60 psi | ---- | ---- | ---- | ---- | ---- | | | | Vertical 0.50 | 2.25 | 6.00 | | Vert 10 | |
| | SCP | 4,362 | 3,691 | 60 psi | ---- | ---- | 3,518 | 2,977 | 60 psi | | | | | | | | | |
| | P | 4,761 | 4,029 | 60 psi | ---- | ---- | 3,809 | 3,223 | 60 psi | | | | | | | | | |
| 10 | S | 9,832 | 8,320 | 60 psi | 691 | 585 | 10,489 | 8,875 | 60 psi | 1800 | 3600 | 68,035 | Horizontal 1.00 | 6.00 | 15.00 | 12 | Horiz 10 | 0.69 |
| | SA | 9,471 | 8,014 | 80 psi | 2,766 | 2,340 | 9,297 | 7,867 | 40 psi | | | | | | | | | |
| | A | 10,013 | 8,472 | 80 psi | 2,797 | 2,366 | ---- | ---- | ---- | | | | | | | | | |
| | B | 5,097 | 4,313 | 80 psi | 5,593 | 4,733 | ---- | ---- | ---- | | | | | | | | | |
| | C | 9,228 | 7,808 | 60 psi | ---- | ---- | ---- | ---- | ---- | | | | Vertical 0.50 | 3.00 | 7.50 | | Vert 13 | |
| | SCP | 9,936 | 8,407 | 60 psi | ---- | ---- | 8,612 | 7,287 | 60 psi | | | | | | | | | |
| | P | 11,197 | 9,474 | 60 psi | ---- | ---- | 9,797 | 8,290 | 60 psi | | | | | | | | | |
| 11 | S | 18,045 | 15,269 | 80 psi | 888 | 751 | 14,962 | 12,630 | 80 psi | ** 1200 | N/A | 108,105 | Horizontal 4.00 | | | 15 | Horiz 10 | 1.60 |
| | SA | 13,358 | 11,303 | 80 psi | 2,961 | 2,505 | 9,980 | 8,445 | 40 psi | | | | | | | | | |
| | A | 14,036 | 11,877 | 80 psi | 2,661 | 2,252 | ---- | ---- | ---- | | | | | | | | | |
| | B | 8,019 | 6,785 | 80 psi | 5,322 | 4,504 | ---- | ---- | ---- | | | | | | | | | |
| | C | 18,045 | 15,269 | 80 psi | ---- | ---- | ---- | ---- | ---- | | | | Vertical 2.00 | | | | Vert 13 | |
| | SCP | 17,833 | 15,090 | 80 psi | ---- | ---- | 17,833 | 15,090 | 80 psi | | | | | | | | | |
| | P | 20,054 | 16,969 | 80 psi | ---- | ---- | 14,038 | 11,878 | 80 psi | | | | | | | | | |

Force Control Industries, Inc.
3660 Dixie Highway Fairfield, Ohio 45014 USA
Phone: 513-868-0900 Fax: 513-868-2105

# Posidyne Specifications (Model 14—20)

| Size | Logic | Max Clutch Torque (Lb. In.) | | | Max. Brake Torque (Lb. In.) | | | | | Max. RPM | | Max. KE per Engmt. (Ft. Lbs.) | Average Thermal HP | | | Air Vol. per Engmt. (in3) | Oil Cap (Qts) | Inertia of Cyclic Parts (Lb.Ft.2) |
|---|---|---|---|---|---|---|---|---|---|---|---|---|---|---|---|---|---|---|
| | | | | | Springs Only | | With Max. Air Assist | | | | | | | | | | | |
| | | Static | Dyn. | Max. Air Press (psi) | Static | Dyn. | Static | Dyn. | Max. Air Press (psi) | Basic & Fan Cooled | Water Cooled | | Basic | Fan | Water | | | |
| 14 | S | 22,989 | 19,453 | 80 psi | 1,681 | 1,410 | 23,737 | 20,085 | 80 psi | ** 1200 | N/A | 170,532 | Horizontal 4.00 | | | 15 | Horiz 10 | 1.75 |
| | SA | 16,484 | 13,948 | 80 psi | 5,237 | 4,431 | 16,264 | 13,762 | 40 psi | | | | | | | | | |
| | A | 17,576 | 14,782 | 80 psi | 4,660 | 3,962 | ---- | ---- | ---- | | | | | | | | | |
| | B | 10,783 | 9,124 | 80 psi | 8,352 | 7,067 | ---- | ---- | ---- | | | | | | | | | |
| | C | 23,453 | 19,844 | 80 psi | ---- | ---- | ---- | ---- | ---- | | | | Vertical 2.00 | | | | Vert 13 | |
| | SCP | 23,183 | 19,617 | 80 psi | ---- | ---- | 20,793 | 17,594 | 80 psi | | | | | | | | | |
| | P | 26,066 | 22,056 | 80 psi | ---- | ---- | 22,056 | 18,662 | 80 psi | | | | | | | | | |
| 20 | S | 31,082 | 26,300 | 80 psi | 2,018 | 1,707 | 32,274 | 27,308 | 80 psi | 600 (Basic) 1800 (Fan) | 1800 | 137,221 | Horizontal | | | 23 | Horiz 25 | 4.37 |
| | SA | 25,837 | 21,862 | 80 psi | 5,045 | 4,269 | 20,173 | 17,069 | 40 psi | | | | | | | | | |
| | A | 26,332 | 22,281 | 80 psi | 4,759 | 4,027 | ---- | ---- | ---- | | | | 1.50 | 8.00 | 25.00 | | | |
| | B | 18,087 | 15,304 | 80 psi | 9,518 | 8,054 | ---- | ---- | ---- | | | | | | | | | |
| | C | 30,455 | 25,770 | 80 psi | ---- | ---- | ---- | ---- | ---- | | | | Vertical | | | | Vert 30 | |
| | SCP | 32,737 | 27,700 | 80 psi | ---- | ---- | 28,115 | 23,789 | 80 psi | | | | 0.75 | 4.00 | 12.50 | | | |
| | P | 34,578 | 29,258 | 80 psi | ---- | ---- | 30,256 | 25,601 | 80 psi | | | | | | | | | |
| 30 | S | 78,857 | 67,028 | 50 psi | 8,010 | 6,808 | 72,185 | 61,357 | 40 psi | 1200 | 1200 | 322,062 | CF | | | 97 | CF | 61.00 |
| | SA | 75,478 | 64,156 | 60 psi | 20,026 | 17,200 | 68,157 | 57,933 | 30 psi | | | | | | | | | |
| | A | 75,478 | 64,156 | 60 psi | 20,026 | 17,200 | ---- | ---- | ---- | | | | | | | | | |
| | C | 78,857 | 67,028 | 50 psi | ---- | ---- | ---- | ---- | ---- | | | | | | | | | |
| | SCP | 76,600 | 65,110 | 45 psi | ---- | ---- | 65,657 | 55,808 | 45 psi | | | | | | | | | |
| | P | 74,871 | 63,640 | 40 psi | ---- | ---- | 64,175 | 54,548 | 40 psi | | | | | | | | | |

NOTES:
Thermal HP ratings based on 1800 RPM and 70° ambient temperature. Higher thermal ratings available with forced lubrication. Consult factory with application details
For Water cooled Units Cooling water flow requirements in GPM equals .10 x thermal horsepower
Oil Capacity is only approximate. Always fill unit to center of sight gauge.
Air pressures are at maximum torque. Operating pressures are generally much lower. Refer to “Pressure vs.Static Torque” charts for proper pressure settings.
Size 11 and 14 Posidyne rated @ 1200 RPM. Fan cooled only. These sizes can run up to 1800 RPM with the External Cooling System shown below.CF- Consult Factory

Force Control Industries, Inc.
3660 Dixie Highway Fairfield, Ohio 45014 USA
Phone: 513-868-0900 Fax: 513-868-2105

# Basic Posidyne Overhung Load Capacity

| Size | Input Shaft | | | Output Shaft | | | | | |
|---|---|---|---|---|---|---|---|---|---|
| | | | | 900 RPM | | 1200 RPM | | 1800 RPM | |
| | 900 RPM | 1200 RPM | 1800 RPM | Without Encoder | With Encoder | Without Encoder | With Encoder | Without Encoder | With Encoder |
| 02 | 700 | 600 | 500 | 765 | 550 | 680 | 490 | 595 | 430 |
| 2.5 | 900 | 800 | 700 | 1020 | 805 | 935 | 740 | 850 | 670 |
| 03 | 1400 | 1350 | 1150 | 1785 | 1410 | 1700 | 1340 | 1490 | 1180 |
| 05 | 1400 | 1350 | 1150 | 1785 | 1410 | 1700 | 1340 | 1490 | 1180 |
| 10 | 1800 | 1700 | 1500 | 2550 | 2140 | 2380 | 2000 | 1960 | 1650 |
| 11 | 2200 | 2000 | --- | 3910 | 3280 | 3570 | 3000 | --- | --- |
| 14 | 2200 | 2000 | --- | 3910 | 3280 | 3570 | 3000 | --- | --- |
| 20 | 4100 | 3000 | 1800 | 4500 | 3780 | 4080 | 3430 | 3530 | 2970 |
| 30 | 9400 | 8500 | --- | 11900 | --- | 10900 | --- | --- | --- |

*Overhung Loads are based on Bearing life L10 25,000 hrs. @ 20% duty at midpoint of shaft extension based on standard male shaft diameters. (Not applicable to C-Face.)*
*CAUTION - Excessive overhung load will shorten bearing life and may exceed the capacity of the shaft to the point of failure*

# Basic Posidyne Dimensions

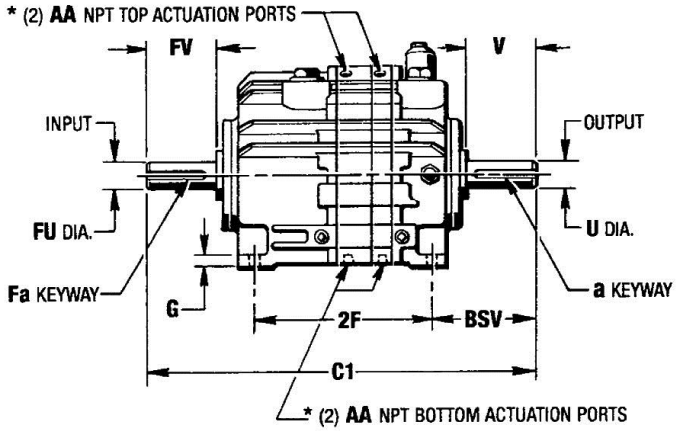


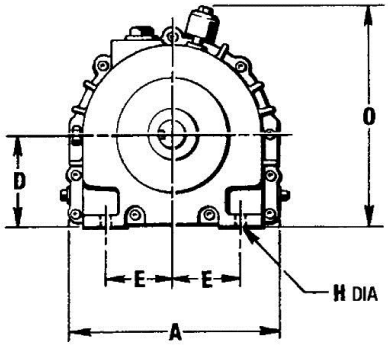


STANDARD SHAFT DIAMETER TOLERANCES
UP TO & INCLUDING 1.500" DIA. ..... +.0000" -.0005"
OVER 1.500" DIA..... +.000" -.001"

| Size | Drive Dimensions *(Inches)* | | | | | | | | | Shaft Dimension *(Inches)* | | | | | | Porting-AA | |
|---|---|---|---|---|---|---|---|---|---|---|---|---|---|---|---|---|---|
| | A | D | E | 2F | G | H | O | BSV | C1 | a Keyway | Fa Keyway | U | FU | V | FV | (Bot.) | (Top) |
| **02** | 9.00 | 4.00 | 3.50 | 7.00 | 0.59 | 0.44 | 9.25 | 3.50 | 14.62 | 1/4 x 1/8 | 1/4 x 1/8 | 1.125 | 1.125 | 2.000 | 2.000 | 1/8-27 | 1/8-27 |
| **2.5** | 9.50 | 4.37 | 3.31 | 8.75 | 0.50 | 0.44 | 10.00 | 4.62 | 18.25 | 5/16 x 5/32 | 5/16 x 5/32 | 1.375 | 1.375 | 3.000 | 3.250 | 1/4-18 | 1/4-18 |
| **03** | 10.25 | 4.50 | 3.31 | 8.77 | 0.50 | 0.44 | 10.69 | 5.16 | 19.25 | 5/16 x 5/32 | 5/16 x 5/32 | 1.375 | 1.375 | 3.500 | 3.500 | 1/4-18 | 1/4-18 |
| **05** | 10.25 | 6.50 | 3.50 | 10.25 | 0.75 | 0.56 | 12.69 | 5.75 | 22.75 | 3/8 x 3/16 | 3/8 x 3/16 | 1.625 | 1.625 | 4.000 | 4.000 | 1/4-18 | 1/4-18 |
| **10** | 12.50 | 6.50 | 3.50 | 15.38 | 1.00 | 0.75 | 14.00 | 5.61 | 27.50 | 3/8 x 3/16 | 3/8 x 3/16 | 1.750 | 1.750 | 3.750 | 3.750 | 1/4-18 | 1/4-18 |
| **11** | 12.63 | 6.50 | 4.75 | 15.38 | 1.00 | 0.75 | 14.56 | 6.75 | 31.56 | 5/8 x 5/16 | 5/8 x 5/16 | 2.375 | 2.375 | 5.000 | 5.620 | 1/4-18 | 1/4-18 |
| **14** | 12.63 | 6.50 | 4.75 | 15.38 | 1.13 | 0.75 | 15.21 | 6.75 | 32.04 | 5/8 x 5/16 | 5/8 x 5/16 | 2.375 | 2.375 | 4.430 | 5.560 | 1/4-18 | 1/4-18 |
| **20** | 17.50 | 9.00 | 5.75 | 19.63 | 1.25 | 0.88 | 19.00 | 7.38 | 35.50 | 5/8 x 5/16 | 5/8 x 5/16 | 2.750 | 2.750 | 4.750 | 4.750 | 3/8-18 | 1/2-14 |
| **30** | 22.50 | 13.00 | 8.00 | 29.25 | 1.50 | 1.06 | 24.37 | 9.88 | 49.00 | 1 x 1/2 | 1 x 1/2 | 4.000 | 4.000 | 6.580 | 6.580 | 1/2-14 | 1/2-14 |

*Top porting and bottom porting are both supplied. The use of bottom porting is recommended to purge contaminants out of the piston area when exhausted. The use of top porting does not purge the piston and can become clogged due to the buildup of moisture and lubricating oil.*

Force Control Industries, Inc.
3660 Dixie Highway Fairfield, Ohio 45014 USA
Phone: 513-868-0900 Fax: 513-868-2105

# Posidyne C-Face Mounting Option Dimensions

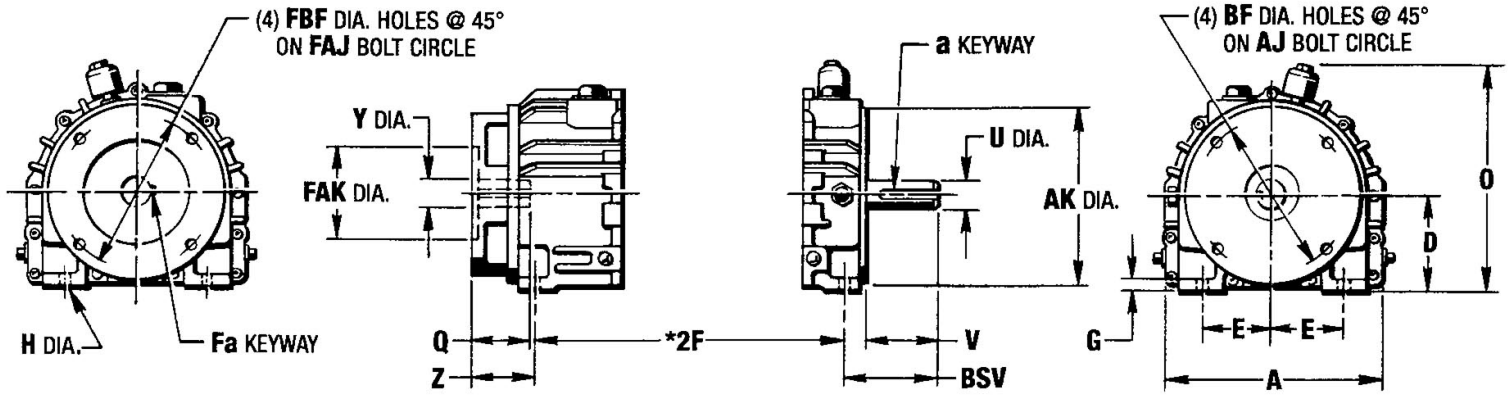


| Size | Input Module | Input Dimensions *(Inches)* | | | | | | | Output Module | Output Dimensions *(Inches)* | | | | | | | Foot Mounting Dimensions *(Inches)* | | | | | |
|---|---|---|---|---|---|---|---|---|---|---|---|---|---|---|---|---|---|---|---|---|---|---|
| | | FAJ | FAK | Fa | FBF | Q | Y | Z | | AJ | AK | a | BF | BSV | U | V | A | D | E | G | H | O |
| 02 | 3 | 5.88 | 4.5 | 3/16 x 3/32 | 0.41 | 2.62 | 7/8 | 3.44 | 3** | 5.88 | 4.5 | 3/16 x 3/32 | 3/8-16 x .75 | 2.94 | 7/8 | 2.06 | 9.00 | 4.00 | 3.50 | 0.59 | 0.44 | 9.25 |
| | 4 | 7.25 | 8.5 | 1/4 x 1/8 | 0.53 | 2.75 | 1 1/8 | 3.25 | 4 | 7.25 | 8.5 | 1/4 x 1/8 | 1/2-13 x 1 | 4.56 | 1 1/8 | 2.69 | | | | | | |
| 2.5 | 3 | 5.88 | 4.5 | 3/16 x 3/32 | 0.41 | 3.50 | 7/8 | 2.56 | 3 | 5.88 | 4.5 | 3/16 x 3/32 | 3/8-16 x .75 | 4.62 | 7/8 | 2.12 | 9.50 | 4.37 | 3.31 | 0.50 | 0.44 | 10.00 |
| | 4 | 7.25 | 8.5 | 1/4 x 1/8 | 0.53 | 3.50 | 1 1/8 | 2.81 | 4 | 7.25 | 8.5 | 1/4 x 1/8 | 1/2-13 x 1 | 4.13 | 1 1/8 | 2.62 | | | | | | |
| | 5 | 7.25 | 8.5 | 5/16 x 5/32 | 0.53 | 3.50 | 1 3/8 | 2.81 | 5 | 7.25 | 8.5 | 5/16 x 5/32 | 1/2-13 x 1 | 4.62 | 1 3/8 | 3.00 | | | | | | |
| 03 | 4 | 7.25 | 8.5 | 1/4 x 1/8 | 0.53 | 3.50 | 1 1/8 | 2.91 | 4 | 7.25 | 8.5 | 1/4 x 1/8 | 1/2-13 x 1 | 4.22 | 1 1/8 | 2.62 | 10.25 | 4.50 | 3.31 | 0.50 | 0.44 | 10.50 |
| | 5 | 7.25 | 8.5 | 5/16 x 5/32 | 0.53 | 3.50 | 1 3/8 | 2.91 | 5 | 7.25 | 8.5 | 5/16 x 5/32 | 1/2-13 x 1 | 5.16 | 1 3/8 | 3.50 | | | | | | |

* See Basic Posidyne Dimensions.
** Spacer may be required to keep Output Housing from interfering with mating C-Face

# Posidyne Long Coupled C-Face Input Option Dimensions

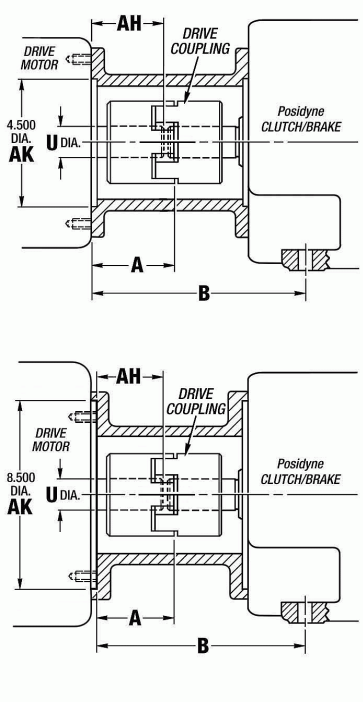


| Posidyne Size | Motor Frame | Dimensions *(Inches)* | | | | |
|---|---|---|---|---|---|---|
| | | AH | AK *Dia* | U *Dia* | A | B |
| 02 | 143T, 145T | 2.290 | 4.500 | 0.875 | 2.630 | 6.620 |
| | 182, 184 | 2.290 | | | | |
| | 182T, 184T | 2.630 | 8.500 | 1.125 | 3.170 | 7.370 |
| | 213, 215 | 2.750 | | | 3.230 | |
| 2.5 | 182T, 184T | 2.630 | 8.500 | 1.125 | 3.460 | 8.690 |
| | 213, 215 | 2.750 | | | 3.520 | |
| | 213T, 215T | 3.130 | | 1.375 | 3.710 | |
| | 254, 256 | 3.500 | | | 3.890 | |
| | 254T, 256T | 3.750 | | 1.625 | 4.600 | |
| 03 | 182T, 184T | 2.630 | 8.500 | 1.125 | 3.500 | 8.780 |
| | 213, 215 | 2.750 | | | 3.510 | |
| | 213T, 215T | 3.130 | | 1.375 | 3.760 | |
| | 254, 256 | 3.500 | | | 4.220 | 9.470 |
| | 254T, 256T | 3.750 | | 1.625 | 4.520 | |

Force Control Industries, Inc.
3660 Dixie Highway Fairfield, Ohio 45014 USA
Phone: 513-868-0900 Fax: 513-868-2105

# Posidyne Piggyback Options Dimensions

## Basic Cooled Input

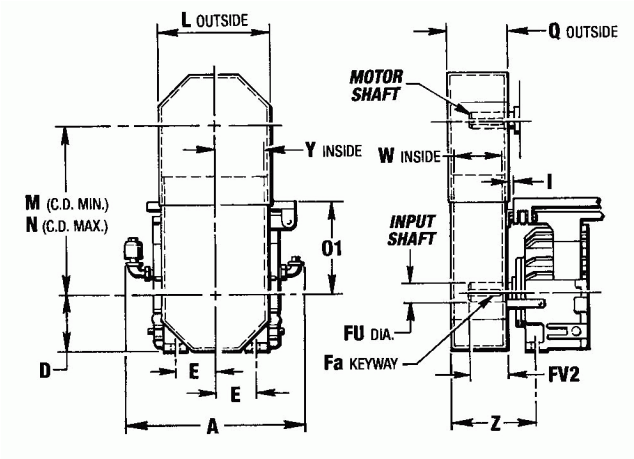


## Fan Cooled Input

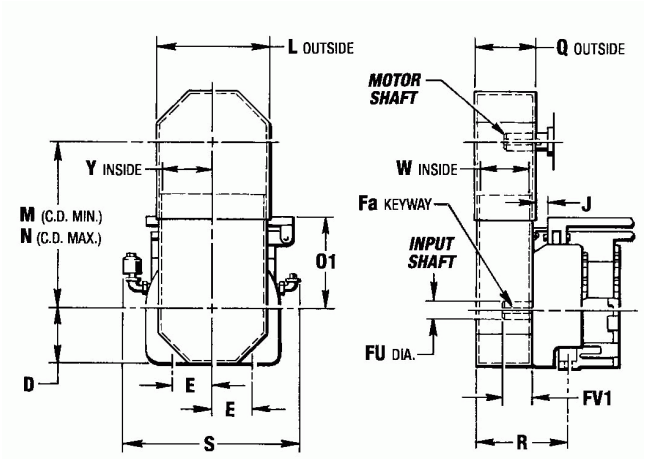


| Size | Drive Dimensions | | | | | | | | Piggyback Dimensions | | | | | | | | | | | Max. Pulley | |
|---|---|---|---|---|---|---|---|---|---|---|---|---|---|---|---|---|---|---|---|---|---|
| | A | D | E | Fa | FU | FV1 | FV2 | S | I | J | L | M | N | 1 | Q | R | W | Y | Z | Dia. | Width |
| 02 | --- | 4.00 | 3.50 | 1/4 x 1/8 | 1 1/8 | 1.00 | 1.00 | --- | --- | --- | 7.31 | 12.31 | 13.31 | 7.12 | 3.16 | 5.38 | 2.50 | 3.12 | 5.38 | 6.00 | 2.00 |
| 2.5 | --- | 4.37 | 3.31 | 5/16 x 5/32 | 1 3/8 | 2.13 | 2.13 | --- | 1.25 | 1.25 | 7.62 | 11.50 | 15.19 | 8.44 | 4.31 | 4.75 | 4.19 | 3.69 | 4.75 | 5.39 | 3.00 |
| 03 | 11.50 | 4.50 | 3.31 | 5/16 x 5/32 | 1 3/8 | 2.38 | 3.50 | 11.50 | 0.38 | 1.50 | 9.12 | 12.50 | 16.50 | 7.94* | 4.68 | 6.62 | 4.38 | 4.44 | 5.50 | 6.84 | 3.25 |
| 05 | 11.50 | 6.50 | 3.50 | 3/8 - 3/16 | 1 5/8 | 2.94 | 4.00 | 11.50 | 1.50 | 2.56 | 9.12 | 12.50 | 16.50 | 7.94* | 4.68 | 8.38 | 4.38 | 4.44 | 7.31 | 6.84 | 3.25 |
| 10 | --- | 6.50 | 3.50 | 3/8 - 3/16 | 1.75 | 2.63 | 3.75 | --- | 1.56 | 2.94 | 12.12 | 16.12 | 19.12 | 9.62 | 5.18 | 8.88 | 4.88 | 5.94 | 7.50 | 9.00 | 3.75 |

**This dimension changes to 8.44 with 254 thru 286 Frame Motors.*
*Manifold Mounted Valve not available with Piggyback Mounting.*

# Posidyne Cooling Options Dimensions

## Fan Cooled Input

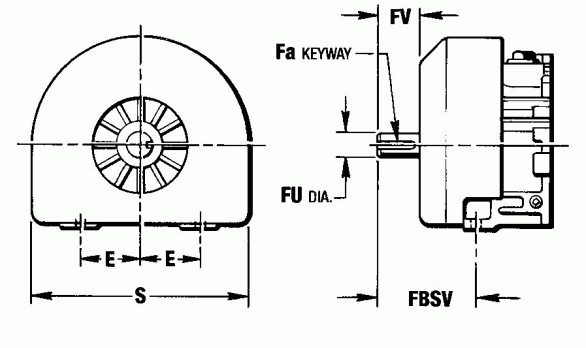


## Water Cooled Input

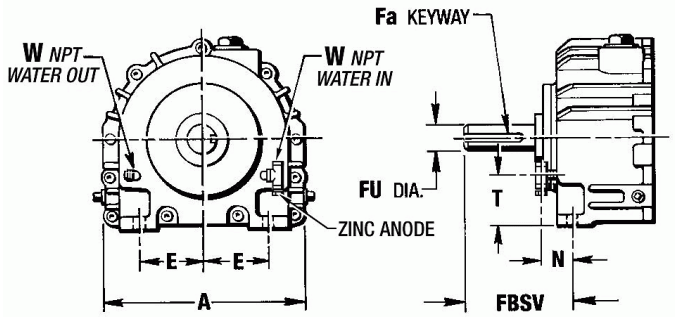


| Size | Dimensions *(Inches)* | | | | | | | | | |
|---|---|---|---|---|---|---|---|---|---|---|
| | A | E | Fa | FBSV | FU | FV | N | S | T | W |
| **02** | 9.00 | 3.50 | 1/4 x 1/8 | 4.12 | 1.13 | 1.38 | ---- | 9.0 | ---- | ---- |
| **2.5** | 9.50 | 3.31 | 5/16 x 5/32 | 4.88 | 1.38 | 2.25 | 2.0 | 10.5 | 2.50 | 0.38 |
| **03** | 10.25 | 3.31 | 5/16 x 5/32 | 5.31 | 1.38 | 2.31 | 2.0 | 11.5 | 2.50 | 0.38 |
| **05** | 10.25 | 3.50 | 3/8 x 3/16 | 6.75 | 1.63 | 2.72 | 1.5 | 11.5 | 4.75 | 0.38 |
| **10** | 12.50 | 3.50 | 3/8 x 3/16 | 6.62 | 1.75 | 2.88 | 2.0 | 14.0 | 4.00 | 0.38 |
| **11** | 12.63 | 4.75 | 5/8 x 5/16 | 9.43 | 2.38 | 5.50 | ---- | 14.0 | ---- | ---- |
| **14** | 12.63 | 4.75 | 5/8 x 5/16 | 9.43 | 2.38 | 5.50 | ---- | 14.0 | ---- | ---- |
| **20** | 17.50 | 5.75 | 5/8 x 5/16 | 8.50 | 2.75 | 3.75 | 4.0 | 19.0 | 7.25 | 0.50 |

Force Control Industries, Inc.
3660 Dixie Highway Fairfield, Ohio 45014 USA
Phone: 513-868-0900 Fax: 513-868-2105

## Posidyne Encoder Options Dimensions

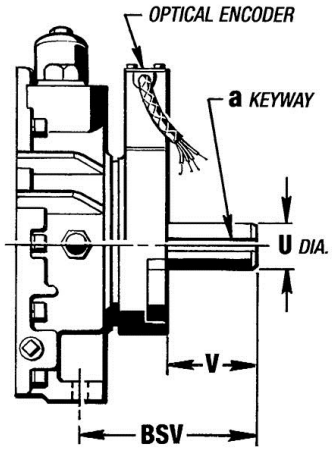


| Size | Output Module | U | V | BSV | a |
|---|---|---|---|---|---|
| **02** | C | 1.125 | 2.17 | 4.57 | 3/16 x 3/32 |
| **2.5** | C | 1.375 | 1.79 | 4.62 | 5/16 x 5/32 |
| **03** | C | | 2.50 | 5.16 | |
| **05** | C | 1.625 | 3.00 | 5.75 | 3/8 x 3/32 |
| **10** | C | 1.750 | 2.81 | 5.50 | |
| **11** | C | 2.375 | 3.91 | 6.75 | 5/8 x 5/32 |
| **14** | C | 2.375 | 3.34 | 6.75 | |
| **20** | C | 2.750 | 4.37 | 8.19 | |
| **30** | --- | --- | --- | --- | --- |

## Posidyne Manifold Mounted Valve Dimensions

Without Regulators and Gauges

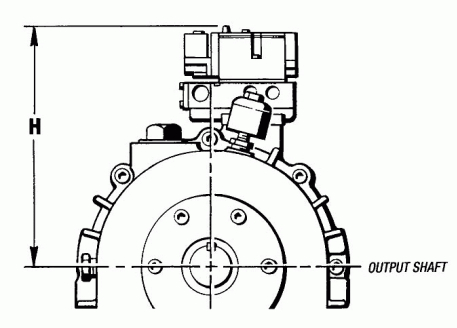


02, 2.5, 03, 05 and 10 Posidyne Clutch/ Brakes (2 Pr. Inlet-3/8 Manifold Mounted Control Valve)

Without Regulators and Gauges

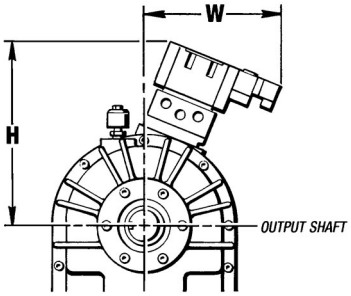


11 and 14 Posidyne Clutch/Brake (2PI-5/8 Manifold Mntd. Control Valve) 20 and 30 Posidyne Clutch/ Brake (2PI-3/4 Manifold Mntd. Control Valve)

With Regulators and Gauges)

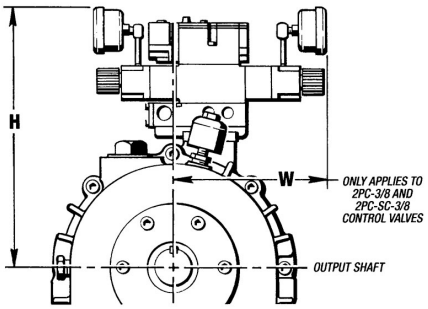


02, 2.5, 03, 05 and 10 Posidyne Clutch/Brakes (1PC-3/8, PC-3/8 and 2PC-SC-3/8 Manifold Mntd. Control Valves)

| Size | Without Regulators | | With Regulators | |
|---|---|---|---|---|
| | H | W | H | W |
| 02 | 8.16 | --- | 10.47 | 6.13 |
| 2.5 | 8.82 | --- | 10.92 | 6.70 |
| 03 | 9.44 | --- | 11.75 | 6.70 |
| 05 | 9.32 | --- | 11.63 | 6.70 |
| 10 | 10.57 | --- | 12.89 | 6.70 |
| 11 | 12.77 | 9.63 | --- | --- |
| 14 | 12.77 | 9.63 | --- | --- |
| 20 | 14.05 | 11.75 | --- | --- |
| 30 | 18.05 | 11.75 | --- | --- |

Force Control Industries, Inc.
3660 Dixie Highway Fairfield, Ohio 45014 USA
Phone: 513-868-0900 Fax: 513-868-2105

# Posidyne Available Options

## (3) Input Module

| | 02 | 2.5 | 03 | 05 | 10 | 11 | 14 | 20 | 30 |
|---|---|---|---|---|---|---|---|---|---|
| 1 | x | x | x | x | x | x | x | x | x |
| 3 | x | x | x | x | --- | --- | --- | --- | --- |
| 4 | x | x | x | x | --- | --- | --- | --- | --- |
| 5 | --- | x | x | x | --- | --- | --- | --- | --- |
| 7 | x | x | x | x | x | --- | --- | --- | --- |
| 9 | x | x | x | --- | --- | --- | --- | --- | --- |
| A | x | x | x | --- | --- | --- | --- | --- | --- |
| B | --- | x | x | --- | --- | --- | --- | --- | --- |
| C | --- | --- | X | --- | --- | --- | --- | --- | --- |

## (4) Control Logic

| | 02 | 2.5 | 03 | 05 | 10 | 11 | 14 | 20 | 30 |
|---|---|---|---|---|---|---|---|---|---|
| S | X | X | X | X | X | X | X | X | X |
| A | X | X | X | X | X | X | X | X | X |
| B | X | X | X | X | X | X | X | X | --- |
| C | X | X | X | X | X | X | X | X | X |
| D | X | X | X | X | X | X | X | X | X |
| E | --- | X | X | X | X | X | X | X | X |
| F | --- | X | X | X | --- | --- | --- | --- | --- |
| G | --- | X | X | X | --- | --- | --- | --- | --- |
| P | X | X | X | X | X | X | X | X | X |
| J | --- | X | X | X | --- | --- | --- | --- | --- |

## (5) Output Module

| | 02 | 2.5 | 03 | 05 | 10 | 11 | 14 | 20 | 30 |
|---|---|---|---|---|---|---|---|---|---|
| 1 | X | X | X | X | X | X | X | X | X |
| 3 | X | X | --- | --- | --- | --- | --- | --- | --- |
| 4 | X | X | X | --- | --- | --- | --- | --- | --- |
| 5 | --- | X | X | --- | --- | --- | --- | --- | --- |
| 7 | X | X | X | X | X | --- | --- | --- | --- |
| C | X | X | X | X | X | X | X | X | X |
| E | X | --- | --- | --- | --- | --- | --- | --- | --- |

## (7) *Cooling

| | 02 | 2.5 | 03 | 05 | 10 | 11 | 14 | 20 | 30 |
|---|---|---|---|---|---|---|---|---|---|
| 1 | X | X | X | X | X | --- | --- | X | X |
| 2 | --- | X | X | X | X | --- | --- | X | --- |
| 5 | --- | X | X | X | X | X | X | X | X |
| 7 | X | X | X | X | X | X | X | X | X |

**Fan cooling not available with C-Face input.*

**Posidyne Piggyback Motor Option Available**

| Motor Frame | 02 | 2.5 | 03 | 05 | 10 |
|---|---|---|---|---|---|
| 143T | X | | | | |
| 145T | X | | | | |
| 182T | X | X | X | | |
| 184T | X | X | X | | |
| 213T | | X | X | X | |
| 215T | | X | X | X | |
| 254T | | | X | X | |
| 256T | | | X | X | |
| 284T | | | | X | X |
| 286T | | | | X | X |
| 324T | | | | X | X |
| 326T | | | | | X |
| 364T | | | | | X |
| 365T | | | | | X |

*To limit the torque delivered to a drive and the physical size of the motor mounted on our piggyback drives, please use the above chart.*

## (6) Mounting Positions

*All options available in all sizes.*

v

Force Control Industries, Inc.
3660 Dixie Highway Fairfield, Ohio 45014 USA
Phone: 513-868-0900 Fax: 513-868-2105

# Posidyne How To Order

| 1 | 2 | 3 | 4 | 5 | 6 | 7 |
|---|---|---|---|---|---|---|

| Encoder 8 | Control Valve 9 |
|---|---|
| *N=No Encoder. See How to Order Encoder for Ordering Number.* | *N=No Valve See How to Order Valve for Ordering Number* |

### (1, 2) Size

| | | |
|---|---|---|
| **0** | **2** | =02 |
| **2** | **5** | =25 |
| **0** | **3** | =03 |
| **0** | **5** | =05 |
| **1** | **0** | =10 |
| **1** | **1** | =11 |
| **1** | **4** | =14 |
| **2** | **0** | =20 |
| **3** | **0** | =30 |

### (7) Cooling

| | |
|---|---|
| **1** | = Basic (Radiant) |
| **2** | = Water Cooled |
| **5** | = Fan Cooled*** |
| **7** | = Fan Cooled, Split Shroud*** |
| **9** | = Force Lube |

### (3) Input Module

| | | | |
|---|---|---|---|
| **1** | = Basic | | |
| **3** | = 4 1/2 FAK, 7/8 FU | 143TC<br>145TC | C-Face Quill |
| **4** | = 8 1/2 FAK, 1 1/8 FU | 182TC<br>184TC | C-Face Quill |
| **5** | = 8 1/2 FAK, 1 3/8 FU | 213TC<br>215TC | C-Face Quill |
| **7** | =Piggyback & Ceiling Mount* | | |
| **9** | = 4 1/2 FAK, 7/8 FU | 143TC<br>145TC | C-Face Coupled |
| **A** | = 8 1/2 FAK, 1 1/8 FU | 182TC<br>184TC | C-Face Coupled |
| **B** | = 8 1/2 FAK, 1 3/8 FU | 213TC<br>215TC | C-Face Coupled |
| **C** | = 8 1/2 FAK, 1 5/8 FU | 254TC<br>256TC | C-Face Coupled |

### (5) Output Module

| | | | |
|---|---|---|---|
| **1** | = Basic | T Frame | |
| **3** | = 4 1/2 FAK, 7/8 FU | 143TC<br>145TC | C-Face Quill |
| **4** | = 8 1/2 FAK, 1 1/8 FU | 182TC<br>184TC | C-Face Quill |
| **5** | = 8 1/2 FAK, 1 3/8 FU | 213TC<br>215TC | C-Face Quill |
| **7** | =Piggyback & Ceiling Mount* | | |
| **C** | = Optical Encoder (02-20) Sizes**<br>*Not available on C Face Output* | | |
| **D** | =Optical Encoder 4 1/2" AK, 5/8" U ** (02 only)** | | |
| **E** | = Optical Encoder 4 1/2" AK, 7/8" U ** (02 only)** | | |

### (6) Mounting Position

| | |
|---|---|
| **H** | = Horizontal |
| **D** | = Vertical, Input Down |
| **U** | = Vertical, Input Up |
| **L** | = Wall on Left (Viewing Input) |
| **R** | = Wall on Right (Viewing Input) |
| **Z** | = Horizontal, Marine Duty |
| **W** | = Vertical, Input Down, Marine Duty |
| **P** | = Vertical, Input Up, Marine Duty |

### (4) Control Logic

| | |
|---|---|
| **S** | =**S** - Air set clutch / light spring set brake with Air assist |
| **A** | =**A** - Air set clutch / medium spring set brake |
| **B** | =**B** - Air set clutch / heavy spring set brake |
| **C** | =**C** - Air set clutch / no brake |
| **D** | =**SA** - Air set clutch / medium spring set brake with Air assist |
| **E** | =**SCP** - Self centered piston / Air set clutch / Air set brake |
| **F** | =**SA/ACP** - Air centered piston/Air set clutch / medium spring set brake with Air assist |
| **G** | =**B/ACP** - Air centered piston / Air set clutch / heavy spring set brake |
| **P** | =**P** - Air set clutch / Air set brake (without springs) |
| **J** | =**A/ACP** - Air centered piston / Air set clutch / medium spring set brake |

**Example**

To order a size 2.5 Posidyne, C Face input for 184TC frame motor, with "S" Control Logic, output housing to accept encoder, horizontal mounting, basic cooling, with manifold mounted control valve.

Ordering Number 25-4SC-H-1/___/___

***NOTES***

** When Piggyback Mounting is required both input and output modules must be specified Piggyback. The motor frame size must also be specified to predrill and tap the motor mounting base.*

*** The Output Housing is machined to accept an encoder.*

**** Not available on C Face input.*